Low-cost IoT gas concentrator system prototype

1st Alicia Montoro-Lendínez
Department of Computer Science
University of Jaén
Jaén, Spain
0000-0003-0498-605X

2nd José Luis López-Ruiz
Department of Computer Science
University of Jaén
Jaén, Spain
0000-0003-2583-8638

3rd F. Charte
Department of Computer Science
University of Jaén
Jaén, Spain
0000-0002-3083-8942

4th Macarena Espinilla-Estévez
Department of Computer Science
University of Jaén
Jaén, Spain
0000-0003-1118-7782

5th Javier Medina-Quero
Department of Computer Science
University of Jaén
Jaén, Spain
0000-0002-8577-8772

***Abstract*—Currently, IoT (Internet of Things) applications based on gas monitoring are essential for areas such as food, health and industry, examples of which are detecting the freshness of food [1], gastrointestinal diseases [2] or pipe leaks [3]. IoT systems are based on one or more electronic devices with sensors and/or actuators that send information to the outside for monitoring. A major drawback to overcome is the high cost of these devices or IoT systems. This paper presents a low-cost IoT system for gas concentrators to detect anomalies. This IoT system, which has been evaluated, concentrates and analyses exhaled air using an MQ sensor.**

***Index Terms*—MQ sensor, volatile organic compounds (VOCs), internet of things (IoT), microcontrollers.**

I. Introduction

The concept of the Internet of Things (IoT) was first introduced in 1999 by the British Kevin Ashton, when he tried to explain the Internet connectivity of radio frequency identification (RFID) tags used to track goods without the help of operators. He defined IoT as a system in which objects in the physical world could be connected to the internet via sensors. Essentially, the IoT paradigm is the coming together of several areas of computing, electronics and telecommunications which have been working hand in hand for a long time and whose main goal is a more ambitious machine-to-machine (M2M) interaction [4]. IoT has a place in different sectors such as consumer electronics [5], the automotive industry [6] and healthcare [7]. This project, which focuses on the health sector, aims to combine the IoT paradigm with the novel sensing of gases from the human digestive system. Existing research, who have used the great olfactory system of dogs, show that the analysis of volatile organic compounds (VOCs) is a tool with great potential for the early detection of diseases such as cancer, diabetes or Alzheimer's disease. In addition, the composition of VOCs is unique to each individual, thus generating a personal olfactory fingerprint [8]–[10]. However, samples from the digestive system need a pre-stage of adequacy to be correctly analysed by gas chromatography combined with mass spectrometry (GC-MS), which is performed by adsorption on a solid sorbent followed by thermal desorption or solid microextraction [11]–[13]. These techniques are expensive due to the equipment and material used. To overcome this disadvantage, this proposal focuses on a prototype of a low-cost gas concentrator IoT system. This IoT system will have the function of concentrating and analysing the exhaled air from the collected samples using an MQ sensor.

The structure of this paper is as follows. Section II reviews the literature that relates the relevant gases to be studied, the gas sensing technologies which have been developed and the IoT applications where gas sensing can be applied. Section III presents the architecture of the system where its hardware and software will be described. Section IV presents the development of the 3D model for the concentrator, the electronic circuit and the operation of the IoT system for storage, persistence and visualisation of the collected data. Section V presents the validation of the IoT system.In the section VI is exposed the electronic contents used in the proposal. Finally, Section VII presents the conclusions drawn and the lines of future work.

II. Related Works

This section provides a literature review of relevant gas studies, the gas sensing technologies that have been developed and the IoT applications where gas sensing can be applied.

Gas sensing and its integration with the IoT paradigm is fundamental to its evolution. However, not all gases have the same relevance for study [14]. Listed below are the most relevant ones for this project focusing on digestive gases:

- **Oxygen(O_2)**, is often used in closed space control to prevent asphyxiation or in the engine industry to make mixtures with better efficiency.
- **Carbon dioxide(CO_2)**, is the key gas for the greenhouse effect and air pollution, being present in the process of respiration.

978-1-6654-2161-4/22/$31.00 ©2022 IEEE

- **Carbon monoxide(CO)**, prolonged exposure can lead to cardiovascular disease and brain damage.
- **VOCs**, are carbon-based organic compounds.
- **Ammonia(NH_3)**, leakage may cause damage to the ocular and olfactory system. Its presence may indicate kidney failure or liver problems.

Just as not all gases are important to study, not all technologies developed in gas sensing are equally suitable. The most popular technologies in gas sensing are listed below:

- **Electrochemicals**, perform chemical reactions to detect the target gas [15].
- **Metal oxide semiconductors (MOS)**, have an internal resistor which varies when it detects the gas, generating an equivalent output voltage. The output voltage will be proportional to the concentration of the measured gas [16].
- **Catalytic**, use a chemical reaction between the catalytic element and the target gas, thus varying the temperature at the sensor resulting in a variation of its resistance. [17].
- **Polymers**, use the variation of the doping level that occurs in the reaction between the polymer and the target gas for detection [18].
- **Carbon nanotubes (CNT)**, use the variation in electrical conductivity that is generated when in contact with the target gas [19].
- **Acoustic and optical**, use the different velocities of propagation in different media to detect the target gas [20].

Some of the applications which integrate the above mentioned advances can be classified in food and animal areas (determine the ripening time of the fruit or the heat time of the cow [21], [22]), sensing area (detect the quality of the air, the position of the oil, explosions or toxic gases, explosions or toxic gases [23]–[25]), industrial area (improve productivity in agriculture or monitor and visualise environmental parameters [27], [28]) and health area (locate elderly people or systems trends with sensors in health [29], [30]). Due to the literature review, it was possible to extract relevant aspects for this project. One of them is the analysis of gases such as CO_2, CO, NH_4 (derived from NH_3), acetone and alcohol. In addition, the choice to use MOS sensor technology is suitable for gas monitoring and its cost is much lower compared to other developed technologies.

III. IoT System Architecture

This section presents the architecture of the gas concentrator system which will be composed of the different development boards, sensors and actuators in order to collect the measurements of exhaled air coming from the digestive system. An overall image of the system, Fig.1, shows the gas concentrator system is made up of two distinct parts: the hardware and the software. On the one hand, the hardware is made up of the following elements:

- **NodeMcu V3 development board (ESP8266):** This development board was chosen because it has a 5V pin with which it can power the gas sensor, as well as the advantage of incorporating Wi-Fi. It is designed to collect the measurements from the gas sensor and send them to the central node.

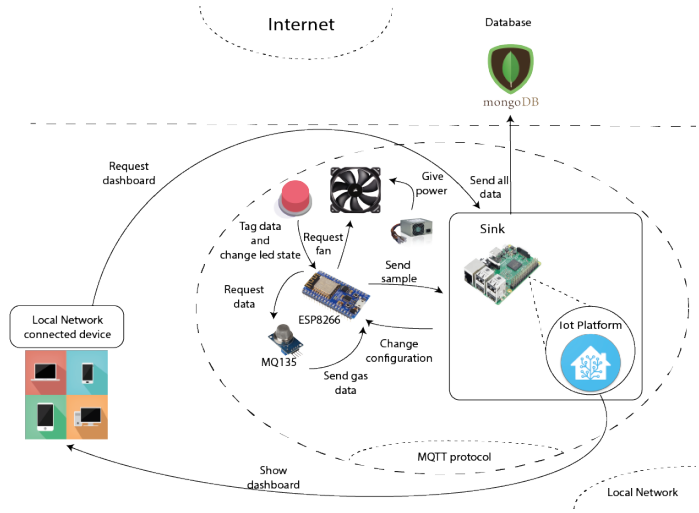

Fig. 1. System schematic

- **Raspberry Pi 4 Model B development Board:** It performs the role of the central node. Its main advantage is its computational capacity for its small size. Its purpose is to manage the data flow from the ESP8266, the database and the IoT platform.
- **MQ135 Gas Sensor:** It can measure the concentration of different gases present in the air such as CO_2, CO, NH_4, acetone and alcohol. It is MOS type, with a low cost and reduced consumption, since its working current is 150 mAh. It should be taken into account during the first time it is used, a preheating of 48 hours is necessary, but in the following uses it will only need a preheating of 20 seconds.
- **Noctua NF-P12 fan:** It allows within the IoT system to generate the forced airflow to generate the concentration of the exhaled air by directing it to where the gas sensor is located. It has a high power (speed of 1700 rpm) and a pulse-width modulation (PWM) pin which allows to control its speed. One drawback is the need for an external power supply for operation.
- **12V power supply:** Its use is exclusively necessary to feed the fan in charge of the flow.
- **Button:** Allows labelling of measurements as ”blown” when exhaled air is being expelled and as ”not blown” when exhaled air is not being collected.
- **Fitting and valve:** They allow connections to be made between the inlet and outlet of the enclosure without loss of air flow. In particular, the flow control valve allows the box to be emptied and cleaned.

On the other hand, the software has been constituted by the following elements:

- **Arduino IDE:** This is the environment chosen to program the ESP8266 development board as it allows debugging

and adding libraries in a simple way. The libraries used in this project are:

  - MQUnifiedSensor, allows conversion from the raw value obtained from the MQ135 sensor to PPM (parts per million) of each gas measurement.
  - PubSubClient, enables to give the ESP8266 the functionality of MQTT (Message Queing Telemetry Transport, the communication protocol used in the project) client.
  - ESP8266WiFi, permits the ESP8266 to perform Wi-Fi connectivity.

- **Pycharm Community:** This is the chosen environment for programming the Python project which is hosted on the Raspberry Pi development board and performs data flow control. This version is free and allows you to conveniently add Python libraries.

TABLE I
MQ135 SENSOR DATA COLLECTION

Measures Gas	Description	Type of variable
id	Unique identifier	ObjectId
measureCO	PPM of CO	String
measureAlcohol	PPM of Alcohol	String
measureCO2	PPM of CO_2	String
measureNH4	PPM of NH_4	String
measureAcetone	PPM of acetone	String
timestamp	Date and time (time zone Spain)	String
labelling	Indicates whether the data belongs to ”blown” or ”unblown”	String

- **MongoDB:** This NoQSL database allows dynamic queries and has a JSON document structure. In this project, as there is only one gas sensor, only one entity has been generated (Table I), although more entities could be generated as more sensors are added.
- **Home Assistant:** This is the IoT platform which is hosted locally on the central node (Raspberry Pi) and allows data collection to be visualised in real time. Fig.2 shows the dashboard of the project, in the upper part with indicators of gas measurements in ppm in real time and a text box showing whether the sample belongs to the ”blown” or ”non-blown” labelling, and in the lower part the real-time graphs of the gas measurements in ppm with respect to time are shown.

Fig. 2. Dashboard

IV. DEVELOPMENT

This section presents the development of the design and manufacture of the 3D box prototype, the design of the electronic circuit for the correct acquisition of data and the development of software for the storage, persistence and visualisation of the data.

A. 3D box model

The 3D design of the box was carried out with CATIA design software. The 3D box (Fig.3) is divided into two com-

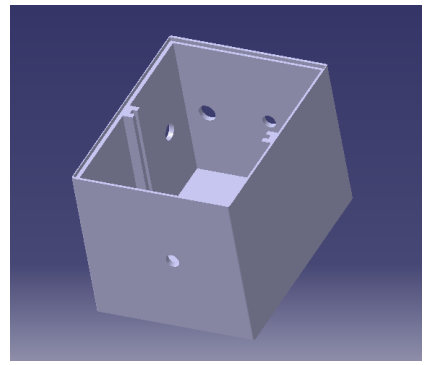

Fig. 3. 3D box design

partments by the fan, whose function is to generate the flow for concentration. The total volume of the box is approximately 4.5L, for its dimensions we took into account studies where gas samples are already collected in Tedlar bags of between 2L and 5L. For the printing of the prototype (Fig.4), the Ultimaker Cura software was used, configuring the filling as densely as possible to avoid any leakage and using polylactic acid fibre (PLA) for its resistance to humidity.

Fig. 4. 3D box

B. Electronic circuit

The design of the electronic circuit has been made taking into account that the analogue signal from the gas sensor has

been used for the measurements. Therefore, it is necessary to use the analogue to digital converter (ADC) pin of the ESP8266. However, to perform the reading correctly, it is

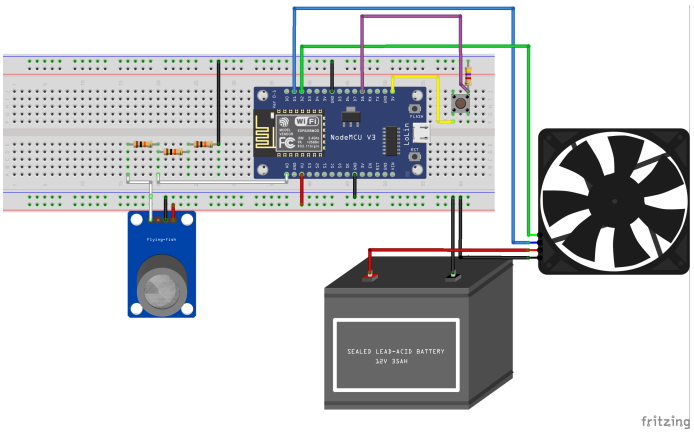

Fig. 5. Electronic circuit schematic

necessary to use a voltage divider to adapt the signal coming from the gas sensor, whose range is 0-5V, to the ADC pin of the ESP8266, whose reading range is 0-3.3V. The connections between the different electronic devices are shown in Fig.5. In addition, a soldered breadboard (Fig.6) was made with sockets to connect the ESP826, the power supply and the fan, preventing the tangle of cables from generating noise in the measured signal.

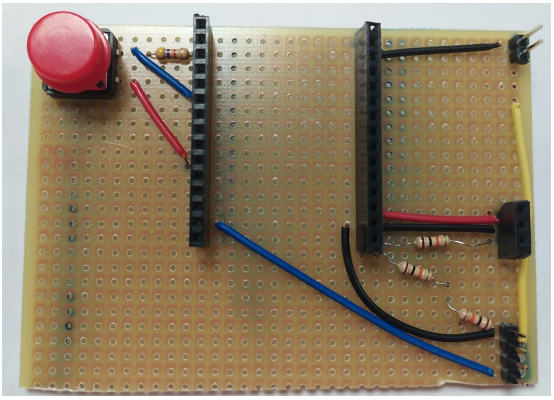

Fig. 6. Final prototype board

C. Software development

The IoT system designed has the ability to store the data in a cloud server, persist it and display it in real time on an IoT platform.

So the IoT system operation starts when the ESP8266 starts, which is responsible for cleaning the box for 30 seconds with the fan at maximum speed (1700 rpm). This is followed by the Wi-Fi and MQTT connection from the ESP8266 and Raspberry Pi development boards (the central node). At the same time, the Raspberry Pi makes, on the one hand, the connection with the cloud server, Mongo DB (database), where the data sent from the ESP8266 is stored and persisted, and, on the other hand, the connection with Home Assistant (IoT platform) for the visualisation of the data sent from the ESP8266.

From this moment, as the concentrator box is divided into two rooms by the fan, the flow generated by the fan is responsible for transporting the air expelled in the nozzle by the user from the first room to the second room, where the concentration of the gaseous bodies takes place. Therefore, if the user has pressed the button, the ESP8266 LED lights up indicating that the collection of these samples will be labelled as part of the user's ”blowing”. Subsequently, if the button is pressed again, the ESP8266 LED turns off indicating that the collection of these samples will be labelled as part of the user's ”no-blow”.

V. Validation

This section presents the two case studies carried out to verify that the low-cost prototype IoT gas concentrator system performs its function correctly.

A. First case study. Concentration.

This case study demonstrates how the IoT system correctly performs the concentration of the measured gases. To do this, first, a user must perform three exhalations with the concentrator box and, subsequently, the user performed another three exhalations over the gas sensor, but this time without the concentrator box. In Fig.7 the measurements obtained in ppm with respect to CO time are presented, where the exhalations performed with the concentrator box are clearly identified with respect to the exhalations performed without the concentrator box. In addition to obtaining a higher concentration of the gas (171,623 ppm compared to 47,195 ppm without the concentrator), they are also prolonged in time (up to 160 seconds), as a result of which the sensor is able to take a better measurement and confirm the function of the IoT gas concentrator system.

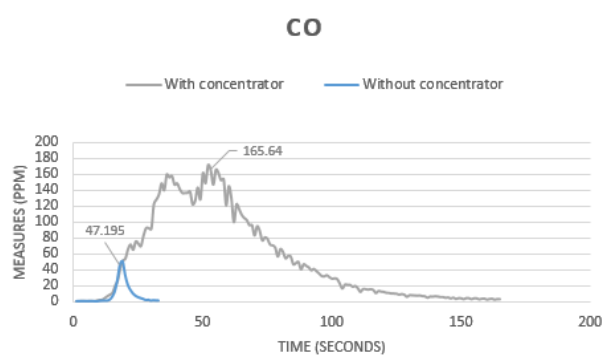

Fig. 7. First case study with CO

B. Second case study. Olfactory fingerprinting and anomaly detection.

In this second case study, measurements were taken from 16 participants who took three exhalations in the concentrator

box. Subsequently, these participants take an ingestion of solid, liquid or both (chocolate and coffee). And after a period of time, these participants again make three exhalations over the concentrator box. From these measurements collected before and after the ingestion (measurement 1 and measurement 2, respectively), an analysis was carried out in order to determine which gases were relevant to determine the olfactory fingerprint of each participant. For this purpose, the percentage variation (PV) between the mean of the measurements of the period before and after the intake (measurement 1 (M1) and measurement 2 (M2), respectively) was carried out.

$$PV1 = \frac{Measurement1 - \overline{Measurement1}}{\overline{Measurement1}} \cdot 100 \quad (1)$$

$$PV2 = \frac{Measurement2 - \overline{Measurement2}}{\overline{Measurement2}} \cdot 100 \quad (2)$$

In Table II, some of the results for the CO_2 measurements collected are presented, showing that the percentage variation between different users is not disparate. Therefore, it can be established that this gas is not key to determine the olfactory footprint in this type of case study. However, in Table III, some of the results analysed for CO, NH_4, acetone and alcohol measurements are presented. In these cases, the percentage variation is indeed disparate, for example, for CO participant 1 has a percentage variation of his measure 1 with respect to the mean of measures 1 of -83.89% while participant 3 would have -24.04%. Therefore, each participant has a different ppm measurement for each gas, which means it is possible to determine the different olfactory fingerprints belonging to each participant. From this sample collection, another type of analysis was carried out where the percentage variation (3) between the data collected before and after the intake (measurement 1 (M1) and measurement 2 (M2), respectively) is measured. The purpose is to detect possible anomalies such as the alteration between the measurements taken before and after ingestion, considering the period elapsed between their collection.

TABLE II
CO_2 DATA COLLECTION IN THE FIRST ANALYSIS

Participant	M1(ppm)	M2(ppm)	PV1(%)	PV2(%)
1	412.17	427.44	-6.91	-3.78
3	437.57	439.00	-1.18	-1.17
15	459.30	446.73	3.73	0.56
Mean	442.78	444.22		

TABLE III
CO, NH_4, ACETONE AND ALCOHOL DATA COLLECTION IN THE FIRST ANALYSIS

CO				
Participant	**M1(ppm)**	**M2(ppm)**	**PV1(%)**	**PV2(%)**
1	29.127	89.09	-83.89	-56.16
3	137.295	144.52	-24.04	-28.88
15	185.327	257.19	2.53	26.56
Mean	180.74	203.21		
NH_4				
Participant	**M1(ppm)**	**M2(ppm)**	**PV1(%)**	**PV2(%)**
1	15.199	30.67	-65.26	-33.02
3	40.251	41.57	-8.01	-9.24
15	59.706	48.59	36.46	6.1
Mean	43.75	45.80		
Acetone				
Participant	**M1(ppm)**	**M2(ppm)**	**PV1(%)**	**PV2(%)**
1	2.585	6.72	-78.73	-46.96
3	9.742	10.17	-19.83	-19.76
15	16.66	12.59	37.17	-0.73
Mean	12.15	12.68		
Alcohol				
Participant	**M1(ppm)**	**M2(ppm)**	**PV1(%)**	**PV2(%)**
1	6.66	16.06	-76.32	-45.22
3	23.31	24.29	-17.14	-17.16
15	38.70	29.70	37.57	1.27
Mean	28.13	29.33		

TABLE IV
CO_2 DATA COLLECTION IN THE SECOND ANALYSIS

Participant	Ingestion	Time (min)	M1 (ppm)	M2 (ppm)	PV (%)
1	Chocolate	17	412.17	427.44	3.57
3	Both	20	437.57	439.00	0.32
15	Coffee	29	459.30	446.73	-2.81

Once again, Table IV shows some of the results for the CO_2 measurements collected, where it can be seen that the percentage variation is not significant as in the previous analysis. Therefore, it is ratified that this gas is not relevant in this type of case study. On the other hand, in Table V, some of the results are presented for the acetone and alcohol measurements collected, as it is the same for CO and NH_4. There are two factors to take into account in the interpretation of these data: the elapsed period and the type of ingestion. It is observed that for participants whose ingestion involves liquid the percentage variation is not as significant as for those participants who only ingested solid, e.g. for acetone participant 15 (liquid) with a measurement of -32.36% compared to participant 1 (solid) with a measurement of 61.58%. Furthermore, for the participants who only ingested solids, if their sample was collected after a short period of time (15 minutes), the percentage change obtained is not very high, and the same is true if the period of time elapsed is excessive (20 minutes). However, the percentage variation is high and significant for an intermediate period of 17 minutes. Consequently, it follows that the sample collected from the participant, after ingestion and taking into consideration the time factor, has a Gaussian bell distribution. Therefore, it is determined that the designed IoT system is able to detect anomalies such as different types of intakes with different collection periods.

VI. EDUCATION AND LEARNING OF ELECTRONICS

This section describes the relation between the proposal presented and the education and learning of electronic skills.

TABLE V
ACETONE AND ALCOHOL IN THE SECOND ANALYSIS

Acetone					
Participant	**Ingestion**	**Time (min)**	**M1 (ppm)**	**M2 (ppm)**	**PV (%)**
1	Chocolate	17	2.58	6.72	61.58
2	Chocolate	15	7.06	11.09	36.38
3	Both	20	9.74	10.17	4.29
10	Chocolate	29	5.24	8.71	39.83
15	Coffee	29	16.66	12.59	-32.36
Alcohol					
Participant	**Ingestion**	**Time (min)**	**M1 (ppm)**	**M2 (ppm)**	**PV (%)**
1	Chocolate	17	6.66	16.06	58.52
2	Chocolate	15	17.20	26.36	34.74
3	Both	20	23.31	24.29	4.06
10	Chocolate	29	12.98	20.97	38.10
15	Coffee	29	38.70	29.70	-30.30

Regarding the area of microcontrollers and microprocessors, this proposal has developed the software of the microcontroller, considering the cloud storage for data persistence and real-time visualization of data through the IoT platform called Home Assistant.

In the communications area, an IoT architecture has been designed which allows sending data from the ESP8266 microcontroller to the proposed sink, which is integrated in the Raspberry Pi 4 microprocessor, and then to the cloud server and the IoT platform.

Also, related to the area of analogic electronics, the proposal includes an adaptation of the data supplied by the gas sensor using a voltage divider which is finally collected by the ADC pin of the ESP8266.

Regarding the field of electronic applications, the proposal presents the design and prototyping of an IoT device with its corresponding electronic development.

Therefore, the proposal presented in this paper involves the study, the identification and the integration of different electronic technologies and their communication, falling directly in the electronic area, to obtain real solutions in the field of health.

VII. CONCLUSION AND FUTURE WORK

This work has presented the different phases carried out for the development of a low-cost IoT gas concentrator system, which can be used for anomaly detection. Being able to store the data in a cloud server, the persistence of the data and the visualisation of this data in real time on the IoT platform.

Some of the useful improvements to expand this line of work in the future include incorporating more sensors with greater range, sensitivity and precision, designing a proprietary system for the early detection of diseases or the creation of personal biomarkers, assessing the inclusion of a portable power supply system with its respective study of the energy consumption of each component or sending data more efficiently, and applying learning techniques for instant classification of the data collected.

ACKNOWLEDGEMENTS

This result has been partially supported through the research projects REMIND project Marie Sklodowska-Curie EU Framework for Research and Innovation Horizon 516 2020, under grant agreement no. 734355, the Spanish Government by the project $RTI2018-098979-A-I00MCIN/AEI/10.13039/501100011033/$, FEDER "Una manera de hacer Europa" and the University of Jaén under Action 1 with code EI_TIC1_2021.

REFERENCES

[1] J. Chen, J. Gu, R. Zhang, Y. Mao, and S. Tian, "Freshness Evaluation of Three Kinds of Meats Based on the Electronic Nose," Sensors (Basel)., vol. 19, no. 3, Feb. 2019.

[2] A. Dan and W. Id, "Application of Electronic-Nose Technologies and VOC-Biomarkers for the Noninvasive Early Diagnosis of Gastrointestinal Diseases," Sensors 2018, Vol. 18, Page 2613, vol. 18, no. 8, p. 2613, Aug. 2018.

[3] F. Wang, W. Lin, Z. Liu, S. Wu, and X. Qiu, "Pipeline Leak Detection by Using Time-Domain Statistical Features," IEEE Sens. J., vol. 17, no. 19, pp. 6431–6442, Oct. 2017.

[4] L. Atzori, A. Iera, and G. Morabito, "The Internet of Things: A survey," Comput. Networks, vol. 54, no. 15, pp. 2787–2805, Oct. 2010.

[5] Devadhanishini, A. Y., Malasri, R. K., Nandinipriya, N., Subashini, V., & Padma Gowri, P. G. "Smart Power Monitoring System Using Iot." 5th International Conference on Advanced Computing and Communication Systems, ICACCS 2019, 813–816.

[6] Arunkumar, P. L., Ramaswamy, M., and Sharmeela, C. "Internet of Things Based Speed Control for an Industrial Electric Vehicle Using ARM Core.", Ecological Engineering & Environmental Technology, 23(2), 113–121, Feb. 2022.

[7] Sengan, S., Khalaf, O. I., Priyadarsini, S., Sharma, D. K., Amarendra, K., & Hamad, A. A. "Smart Healthcare Security Device on Medical IoT Using Raspberry Pi".International Journal of Reliable and Quality E-Healthcare (IJRQEH), 2022, vol. 11, no 3, p. 1-11.

[8] G. A. A. Schoon, D. De Jonge, and P. Hilverink, "How dogs learn to detect colon cancer—Optimizing the use of training aids," J. Vet. Behav., vol. 35, pp. 38–44, Jan. 2020.

[9] [1] B. B, K. M, L. T, and A. A, "Human exhaled air analytics: biomarkers of diseases," Biomed. Chromatogr., vol. 21, no. 6, pp. 553–566, Jun. 2007.

[10] B. AW, van B. JJ, D. JW, S. A, W. EF, and van S. FJ, "The versatile use of exhaled volatile organic compounds in human health and disease," J. Breath Res., vol. 6, no. 2, Jun. 2012.

[11] Deng, Chunhui, et al. "Determination of Acetone in Human Breath by Gas Chromatography–Mass Spectrometry and Solid-Phase Microextraction with on-Fiber Derivatization." Journal of Chromatography B, vol. 810, no. 2, Elsevier BV, Oct. 2004, pp. 269–75.

[12] Grote, Christoph, and Janusz Pawliszyn. "Solid-Phase Microextraction for the Analysis of Human Breath." Analytical Chemistry, vol. 69, no. 4, Anal Chem, 1997, pp. 587–96.

[13] C. Bicchi, C. Cordero, and P. Rubiolo, "A survey on high-concentration-capability headspace sampling techniques in the analysis of flavors and fragrances," J. Chromatogr. Sci., vol. 42, no. 8, pp. 402–409, 2004.

[14] J. B. A. Gomes, J. J. P. C. Rodrigues, R. A. L. Rabêlo, N. Kumar, and S. Kozlov, "Actuator Networks Sensor and IoT-Enabled Gas Sensors: Technologies, Applications, and Opportunities," 2019.

[15] Simões, F. R., & Xavier, M. G. "Electrochemical Sensors.". Nanoscience and Its Applications, (2017),

[16] Binions, R., & Naik, A. J. T." Metal oxide semiconductor gas sensors in environmental monitoring.". Semiconductor Gas Sensors, (2013). 433–466.

[17] Cuenya, B. R., & Kolmakov, A. (2008). "Nanostructures: sensor and catalytic properties." In Functional Nanostructures,2008, (pp. 305-344).

[18] Lakard, B., Carquigny, S., Segut, O., Patois, T., & Lakard, S."Gas Sensors Based on Electrodeposited Polymers.". Metals 2015, Vol. 5, Pages 1371-1386.

[19] Meyyappan, M. "Carbon Nanotube-Based Chemical Sensors.". Small, 2016, 12(16), 2118–2129.

[20] Iniewski, K. ”Optical, acoustic, magnetic, and mechanical sensor technologies.” CRC Press, 2012.
[21] M. Abu, N. S. Olympio, J. O. Darko, M. Abu, N. S. Olympio, and J. O. Darko, “Determination of Harvest Maturity for Mango (Mangifera indica L.) Fruit by Non-Destructive Criteria,” Agric. Sci., vol. 12, no. 10, pp. 720–726, Oct. 2021.
[22] A. Manzoli et al., “Volatile compounds monitoring as indicative of female cattle fertile period using electronic nose,” Sensors Actuators B Chem., vol. 282, pp. 609–616, Mar. 2019.
[23] F. Harrou, A. Dairi, Y. Sun, and F. Kadri, “Detecting Abnormal Ozone Measurements with a Deep Learning-Based Strategy,” IEEE Sens. J., vol. 18, no. 17, pp. 7222–7232, Sep. 2018.
[24] J. Johny, R. Prabhu, W. K. Fung, and J. Watson, “Investigation of positioning of FBG sensors for smart monitoring of oil and gas subsea structures,” Ocean. 2016 - Shanghai, Jun. 2016.
[25] [1] T. K. Bhattacharyya, S. Sen, D. Mandal, and S. K. Lahiri, “Development of a wireless integrated toxic and explosive MEMS based gas sensor,” Proc. IEEE Int. Conf. VLSI Des., vol. 2006, pp. 4–7, 2006.
[26] P. Kanakam, S. M. Hussain, and A. S. N. Chakravarthy, “Electronic noses: Forestalling fire disasters: A technique to prevent false fire alarms and fatal casualties”, 2015 IEEE International Conference on Computational Intelligence and Computing Research (ICCIC), pp.1-6, Mar. 2015.
[27] T. A. A. Ali, V. Choksi, and M. B. Potdar, “Precision Agriculture Monitoring System Using Green Internet of Things (G-IoT),” Proc. 2nd Int. Conf. Trends Electron. Informatics, ICOEI 2018, pp. 481–487, Nov. 2018.
[28] J. Josué et al., “Internet of Things application to identify risk factors in industrial environments (Aplicación de Internet de las Cosas para identificar factores de riesgo en ambientes industriales).” Pist. Educ., vol. 41, no. 133, Dec. 2019.
[29] Albín-Rodríguez, A. P., De-La-fuente-robles, Y. M., López-Ruiz, J. L., Verdejo-Espinosa, Á., & Estévez, M. E. (2021). UJAmI Location: A Fuzzy Indoor Location System for the Elderly. International Journal of Environmental Research and Public Health 2021, Vol. 18, Page 8326, 18(16), 8326.
[30] Peláez, M. D., López-Medina, M., Espinilla, M., & Medina-Quero, J. (2017). Key Factors for Innovative Developments on Health Sensor-Based System. Lecture Notes in Computer Science (Including Subseries Lecture Notes in Artificial Intelligence and Lecture Notes in Bioinformatics), 10209 LNCS, 665–675.
[31] M. Bouza, J. Gonzalez-Soto, R. Pereiro, J. C. De Vicente, and A. Sanz-Medel, “Exhaled breath and oral cavity VOCs as potential biomarkers in oral cancer patients,” J. Breath Res., vol. 11, no. 1, p. 016015, Mar. 2017.
[32] Q. Li, F. Xiaoan, K. Xu, H. He, and N. Jiang, “A stability study of carbonyl compounds in Tedlar bags by a fabricated MEMS microreactor approach,” Microchem. J., vol. 160, p. 105611, Jan. 2021.